CR4640 Loop-Powered AC Voltage Transmitter

4-20 mA DC LOOP POWERED, AVERAGE SENSING

The **CR4600** Series, Loop-Powered AC Voltage Transmitters are designed to provide a 4 - 20 mA DC output that is proportional to the average RMS AC voltage input. These devices are best suited for general applications, such as fixed frequency voltage supplies.

E199795

CR4620
One Element Transmitter

Regulatory Agencies

- Approved to UL3111-1, First Editon, Ammendment 2
- Approved to CAN/CSA-C22.2, No. 1010.1-92
- Meets requirement of IEC 61010-1 and BS EN 61010-1

Features

- Monitor for over/under voltage
- Sense phase loss
- Power monitoring
- Multi-point instrumentation needs

CR4640
Two Element Transmitter

Applications

- 35 DIN Rail or Panel Mount
- Outputs isolated from inputs
- One or two element
- Connection diagram printed on case

Where to Buy http://WWW.JDGASTORE.COM

- Pricing: pricing/4600.html

See page 35 for typical applications

Part Numbers

CR4620 - ❑ Single Element with 4 - 20 mA DC output
CR4640 - ❑ Two Element with 4 - 20 mA DC output

❑ Add suffix for input range

50	-	0-50 Vac
150	-	0-150 Vac
250	-	0-250 Vac
500	-	0-500 Vac *

Other Ranges Available

* not UL recognized

Specifications

Basic Accuracy:..... 0.5%
Thermal Drift:..... 500 PPM/°C
Operating Temperature:..... 0°C to +60°C
Polution Degree:..... 2
Installation Catagory:..... CAT II
Response Time: ..... 250 ms
Insulation Voltage:..... 2500 Vdc
Altitude:..... 2000 meter max.
Calibration:..... Average Sensing, RMS Calibrated

Power Source:..... Loop Powered
Loop Voltage:..... 24 Vdc
Frequency Range:.... 20Hz - 5 KHz
Typical Load:..... 0 - 300 Ω @ 24 Vdc
Compliance Voltage:. 16 to 28 Vdc
MTBF:..... Greater than 100 K hours
Cleaning:..... Water-dampened cloth
Relative Humidity:..... 80% for temperatures up to 31°C and decreasing linearly to 50% at 40°C

Connection Drawings

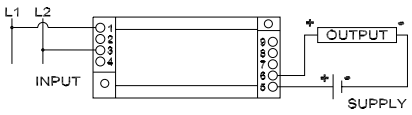

CR4620 One Element 4 - 20 mA DC Output

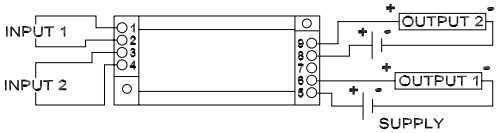

CR4640 Two Element, 4 - 20 mA DC Output

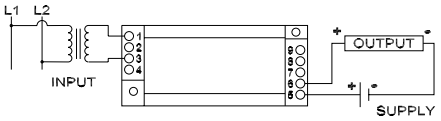

CR4620 One Element with External Voltage Transformers * *

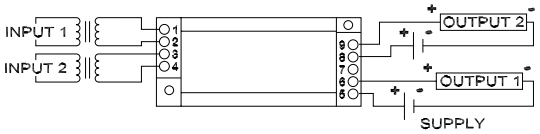

CR4640 Two Element with External Voltage Transformers * *

* * USE CR MAGNETICS LOW AND MEDIUM VOLTAGE POTENTIAL TRANSFORMERS

Note: The building installation must have a switch or circuit-breaker that is in close proximity and within easy reach of the operator. The switch or circuit breaker shall be marked as the disconnecting device for the equipment.

Outline Drawing

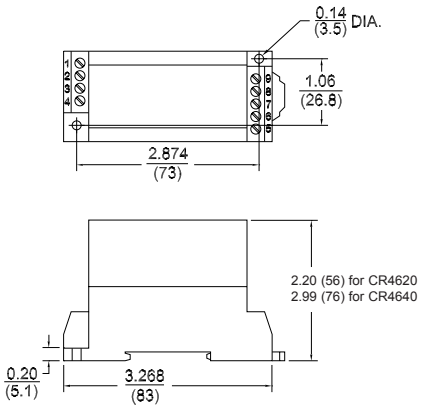

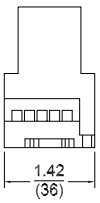

inch (mm)