NEMA 12-13 DISCONNECT 9500 UxDSS

Stainless steel multi-door disconnect enclosures

Quick Features :
- Seamless welding
- Poured gasket
- Padlock handles
- Drip shield
- Superior hinging
- 180° door opening
- Panel is included
- Panel is double bent
- Stainless steel

The 9500 UxDSS oil and dust tight right flange mounted safety disconnect enclosures are used indoors for protection against dirt, dust, oil and water splashing. One, two or three door combinations are available. The 9500 UxDSS are made from quality 11 GA (type 304) stainless steel with all seams continuously welded. Most center posts can be removed (refer to drawings) to facilitate the installation of the inner panel. The ball bearing pins of the concealed die cast hinges can be easily pulled out to remove the doors. Three point automotive padlockable handles ensure positive closing on all doors. The new latching rod system interlocks with the disconnect handle and eliminates the need to purchase an adaptor. A door interlock is installed to ensure that the left hand door(s) (slave) can only be opened if the right hand door (master) is open and the disconnect switch is powered off. Door and body stiffeners are provided on larger models.

Each enclosure comes complete with 10 GA inner panel(s) which mount on M10 welded studs. A print pocket is provided. The enclosures' exterior are unpainted and brushed smooth. The enclosures' interior and panels are finished with white heat fused polyester powder, electrostatically applied on a phosphatized base.

CSA Certified / UL Listed
NEMA 12-13 / IP65

If the 9500 UxDSS is to be used with a flange mounted disconnect switch or a circuit breaker, the following items must be ordered:

Ordering an Allen-Bradley 1494V

Disconnect switch
- an operating mechanism with the disconnect switch 1494V
- an operating handle 1494V-H1
- a connecting rod 1494V-RA1 if the enclosure is 8" deep or 1494V-RA2 is the enclosure is 12" deep
- if required, a trailer fuse block kit 1494V, a fuse clip and line and load connectors.

Circuit breaker
- a Westinghouse or General Electric circuit breaker.
- an operating mechanism 1494V
- an operating handle 1494V-H11
- a connecting rod 1494V-RA1 if the enclosure is 8" deep or 1494V-RA2 is the enclosure is 12" deep

Ordering a Cutler Hammer

Disconnect switch catalog C361
- an operating mechanism with the disconnect switch
- an operating handle (C361-H2 or H4)

Circuit breaker operators catalog C371
- a Cutler hammer or Westinghouse circuit breaker
- an operating mechanism
- an operating handle

Ordering a Square D Class 9422

Disconnect switch
- an operating mechanism with the disconnect switch class 9422
- an operating mechanism handle class 9422 Type A-1

Circuit breaker
- a Square D circuit breaker
- an operating mechanism class 9422
- an operating mechanism handle class 9422 Type A-1

Ordering a General Electric

Disconnect Switches
- a disconnect switch QMR or QMW
- a fuse clip kit if required
- a TDAI flange handle
- an operating mechanism, variable depth

Circuit breakers
- a circuit breaker
- a TDAI flange handle
- an operating handle 1494V-H11
- an operating mechanism, variable depth

Ordering an Asea Brown Boveri

Disconnect switches
- a switch flange operated fuse if required
- a DSFHS-12 shaft
- a DSFHN-HS12 handle

Circuit breaker
- a circuit breaker
- an operating mechanism
- a FHS-12 shaft
- a FHN-HS12 handle

Ordering an I-T-E Max-FlexTM

Disconnect switch
- a basic right hand switch
- a fuse kit if required
- a handle FHOHS flange mounted
- an operator FHOSO6R
- a cable FHOECO36

Circuit breaker
- a circuit breaker
- a set of pressure wire connectors
- a handle FHOH flange mounted
- an operating mechanism
- a standard cable 36"

Ordering a Westinghouse

- a disconnect switch or circuit breaker type DS
- a yoke assembly and backplate
- a rod and brace assembly
- a pivot mechanism
- an operating handle

Disconnect switches and operating mechanisms are not furnished with the enclosures.

Visit **www.jimdgray.com** for details.

Call us @ 1-972-699-9976

Data subject to change without notice.

Suggested Accessories

p.364

p.364

p.366

p.365

p.360

p.367

p.371

NEMA 12-13 DISCONNECT 9500 U1DSS

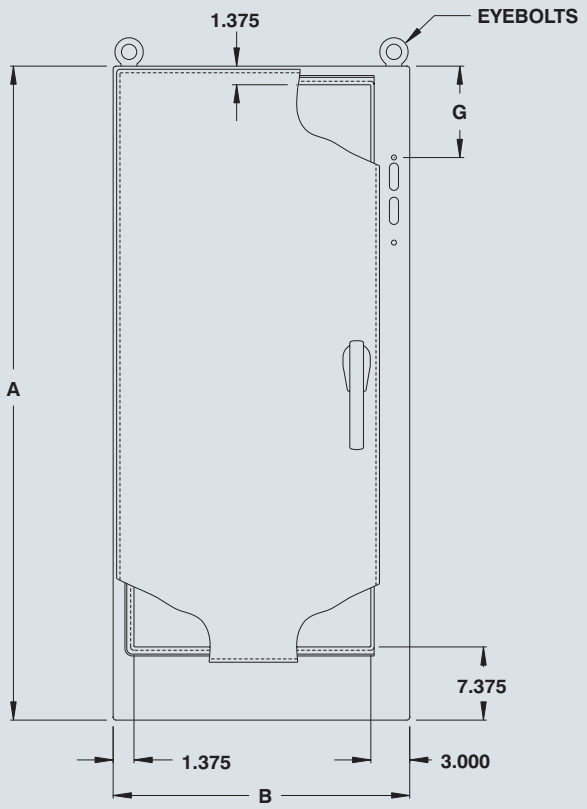

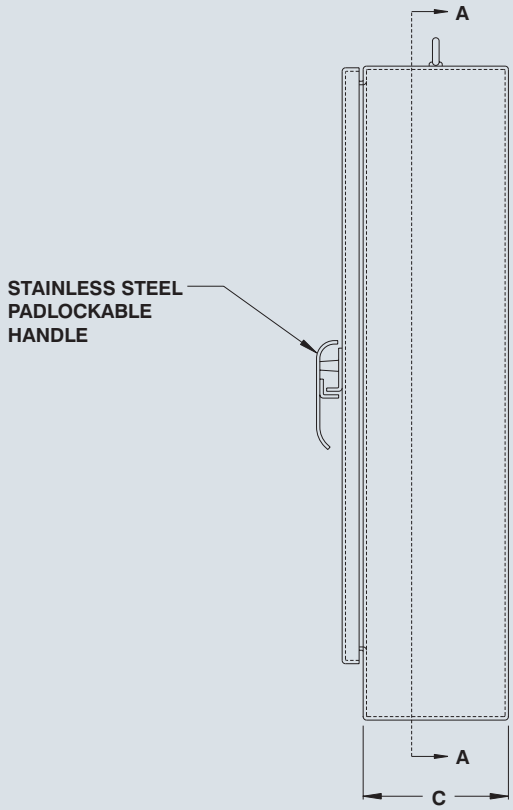

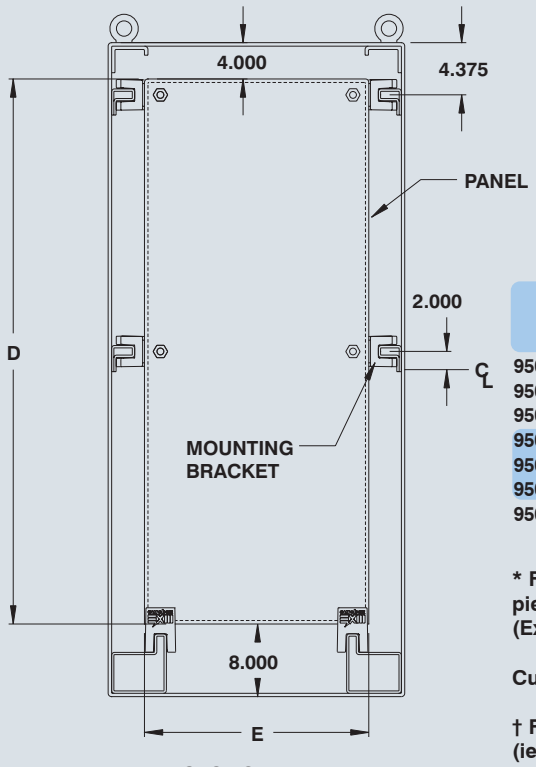

SECTION A-A

CATALOG NUMBER	DIMENSIONS						SHIP WGHT LBS.
	A	B	C	D	E	G	
9500 U1DSS722818	72	27.5	18	60	21.75	11.875	426
9500 U1DSS723418	72	33.5	18	60	27.75	11.875	492
9500 U1DSS724018	72	39.5	18	60	33.75	11.875	558
9500 U1DSS844018	84	39.5	18	72	33.75	17.875	641
9500 U1DSS904018	90	39.5	18	78	33.75	20.875	707
9500 U1DSS904020	90	39.5	20	78	33.75	20.875	725
9500 U1DSS904024	90	39.5	24	78	33.75	20.875	755

*** For Allen Bradley Bulletin 1494F and 1494D disconnect switch piercings, add suffix 'AB' to the catalog number. (Example: 9500 U1DSS723418AB)**

Custom piercings are available upon request.

† For stainless steel type 316, add suffix '6' to the catalog number (ie. 9500 U1DSS7228186).

Data subject to change without notice.

p.375

p.376

p.378

p.384

NEMA 12-13 DISCONNECT 9500 U2DSS

Quick Features :

- Seamless welding
- Poured gasket
- Padlock handles
- Drip shield
- Superior hinging
- 180° door opening
- Panel is included
- Panel is double bent
- Stainless steel

Visit **www.eurobex.com** for details.

Call us toll free 1-800-363-2423

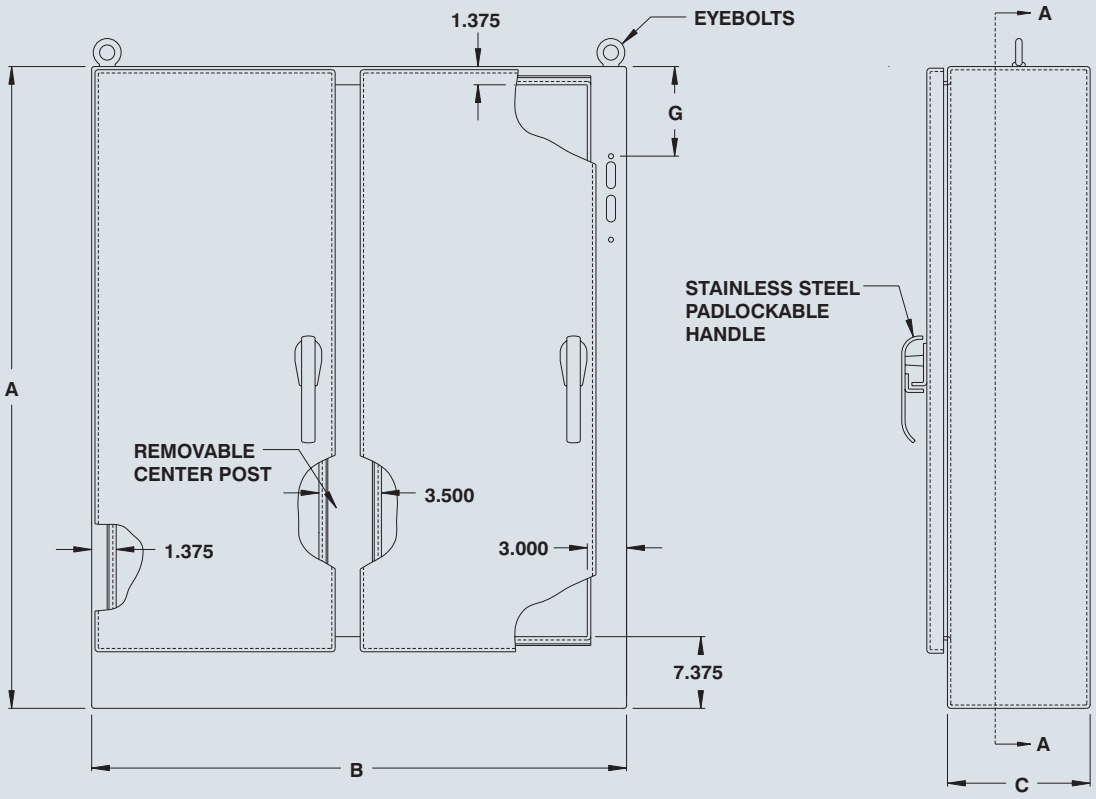

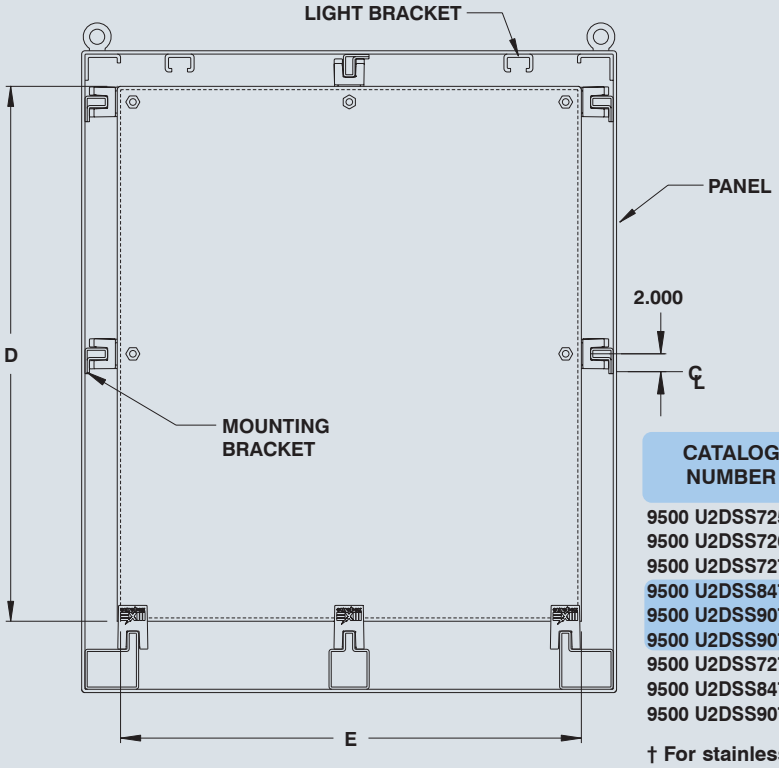

SECTION A-A

CATALOG NUMBER	DIMENSIONS A	B	C	D	E	G	SHIP WGHT LBS.
9500 U2DSS725418	72	53.75	18	60	48	11.875	742
9500 U2DSS726618	72	65.75	18	60	60	11.875	894
9500 U2DSS727818	72	77.75	18	60	72	11.875	1027
9500 U2DSS847818	84	77.75	18	72	72	17.875	1110
9500 U2DSS907818	90	77.75	18	78	72	20.875	1196
9500 U2DSS907820	90	77.75	20	78	72	20.875	1286
9500 U2DSS727824	72	77.75	24	60	72	11.875	1190
9500 U2DSS847824	84	77.75	24	72	72	17.875	1265
9500 U2DSS907824	90	77.75	24	78	72	20.875	1343

† For stainless steel type 316, add suffix '6' to the catalog number (ie. 9500 U2DSS7254186).
* For Allen Bradley Bulletin 1494F and 1494D disconnect switch piercings, add suffix 'AB' to the catalog number.

Data subject to change without notice.

Suggested Accessories

p.364

p.364

p.366

p.365

p.360

p.367

p.371

NEMA 12-13 DISCONNECT 9500 U3DSS

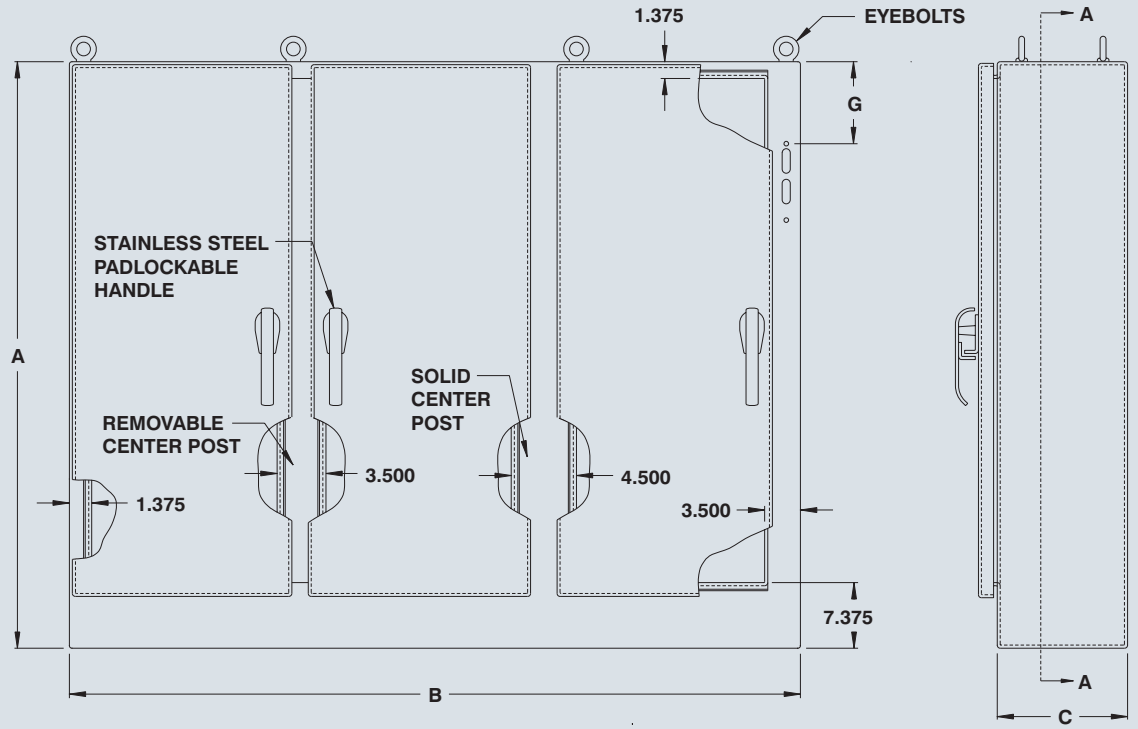

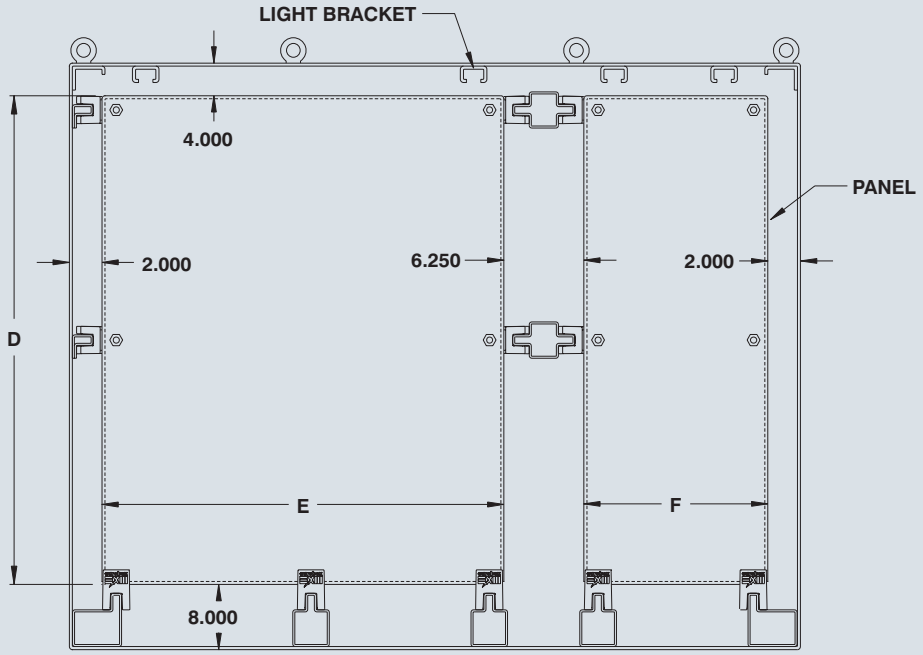

SECTION A-A

† For stainless steel type 316, add suffix '6' to the catalog number (ie. 9500 U3DSS72100186).

* For Allen Bradley Bulletin 1494F and 1494D disconnect switch piercings, add suffix 'AB' to the catalog number. (ie. 9500 U3DSS7210018AB)

CATALOG NUMBER	DIMENSIONS							SHIP WGHT LBS.
	A	B	C	D	E	F	G	
9500 U3DSS7210018	72	99.5	18	60	60	27.75	11.875	1255
9500 U3DSS7211818	72	117.5	18	60	72	33.75	11.875	1483
9500 U3DSS8411818	84	117.5	18	72	72	33.75	17.875	1711
9500 U3DSS8411824	84	117.5	24	72	72	33.75	17.875	1826
9500 U3DSS9011824	90	117.5	24	78	72	33.75	20.875	1940

Data subject to change without notice.

p.375

p.376

p.378

p.384