Splitter Boxes & Troughs EEMAC/NEMA 4X

The 1400 BSS & TSS stainless steel splitter boxes and troughs are designed for 600 V (max.) service, 3 or 4 wires, in ordinary locations.

There is a curled lip around all sides to prevent water from entering when the enclosure is open. This also increases rigidity. They are made from 14 GA or 16 GA stainless steel. They have four mounting holes and a screw cover. There are no knockouts. The phenolic insulated splitter blocks are factory installed on an interior panel mounted on welded studs. The enclosure's exterior is unpainted and brushed smooth. The enclosures' interior and panel are powder coated white (other colors available).

CSA Certified

NEMA 4X / IP66

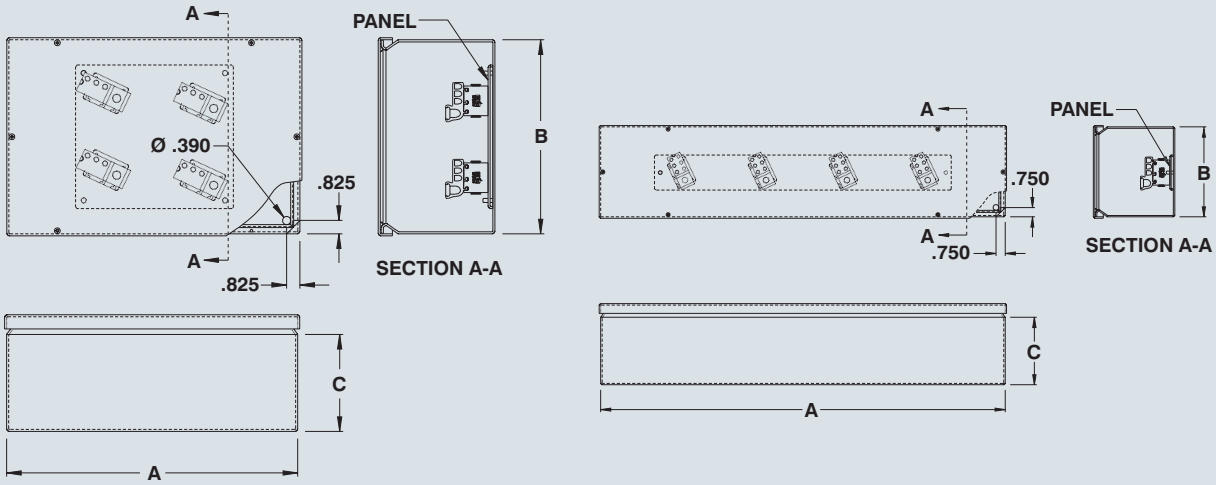

CATALOG NUMBER 3 WIRES	CATALOG NUMBER 4 WIRES	MAX AMP. CU-AL	MAIN LUGS QTY	MAIN LUGS WIRES	BRANCH LUGS QTY	BRANCH LUGS WIRES	DIMENSIONS A	DIMENSIONS B	DIMENSIONS C	SHIP WGHT LBS.
1400 BSS73	1400 BSS74	70	1	2-14	3	2-14	10	10	5	8
1400 BSS103	1400 BSS104	125	1	2/0-14	3	2/0-14	12	12	5	11
1400 BSS203	1400 BSS204	225	1	300MCM-6	3	2/0-14	18	12	6	16
1400 BSS403	1400 BSS404	400	1	600MCM-4	3	600MCM-4	22	20	8	34
1400 BSS603	1400 BSS604	600	2	600MCM-4	2	600MCM-4	26	25	8	49

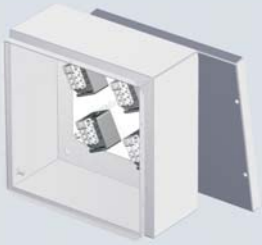

CATALOG NUMBER 3 WIRES	CATALOG NUMBER 4 WIRES	MAX AMP. CU-AL	MAIN LUGS QTY	MAIN LUGS WIRES	BRANCH LUGS QTY	BRANCH LUGS WIRES	DIMENSIONS A	DIMENSIONS B	DIMENSIONS C	SHIP WGHT LBS.
1400 TSS273	1400 TSS274	70	1	2-14	6	2-14	24	6	5	12
1400 TSS373	1400 TSS374	70	1	2-14	6	2-14	36	6	5	15
1400 TSS473	1400 TSS474	70	1	2-14	6	2-14	48	6	5	20
1400 TSS2103	1400 TSS2104	125	1	1/0-14	6	2-14	24	6	5	12
1400 TSS3103	1400 TSS3104	125	1	1/0-14	6	2-14	36	6	5	15
1400 TSS4103	1400 TSS4104	125	1	1/0-14	6	2-14	48	6	5	20
1400 TSS5103	1400 TSS5104	125	1	1/0-14	6	2-14	60	6	5	24
1400 TSS6103	1400 TSS6104	125	1	1/0-14	6	2-14	72	6	5	28
1400 TSS2203	----------	225	1	300MCM-6	6	2/0-14	24	8	6	19
1400 TSS3203	1400 TSS3204	225	1	300MCM-6	6	2/0-14	36	8	6	26
1400 TSS4203	1400 TSS4204	225	1	300MCM-6	6	2/0-14	48	8	6	32
1400 TSS5203	1400 TSS5204	225	1	300MCM-6	6	2/0-14	60	8	6	40
1400 TSS6203	1400 TSS6204	225	1	300MCM-6	6	2/0-14	72	8	6	46
1400 TSS3403	----------	400	2	250MCM-1/0*	6	3/0-14	36	11	8	34
1400 TSS4403	1400 TSS4404	400	2	250MCM-1/0*	6	3/0-14	48	11	8	42
1400 TSS5403	1400 TSS5404	400	2	250MCM-1/0*	6	3/0-14	60	11	8	50
1400 TSS6403	1400 TSS6404	400	2	250MCM-1/0*	6	3/0-14	72	11	8	59
1400 TSS4603	1400 TSS4604	600	4	250MCM-1/0†	6	3/0-14	48	11	8	42
1400 TSS5603	1400 TSS5604	600	4	250MCM-1/0†	6	3/0-14	60	11	8	50
1400 TSS6603	1400 TSS6604	600	4	250MCM-1/0†	6	3/0-14	72	11	8	59

* OR 1 x 600MCM-4 † OR 2 x 600MCM-4 For 4 wire systems, add 1 lb to weight.

Quick Features :
- NEMA 4X
- 3 or 4 wires
- Drip shield
- Interior panel included
- Brushed stainless steel

Visit **www.jimdgray.com** for details.

Call us toll free 1-972-699-9976

Data subject to change without notice.

Suggested Accessories

p.369

p.369

p.344

p.152